SG 4900

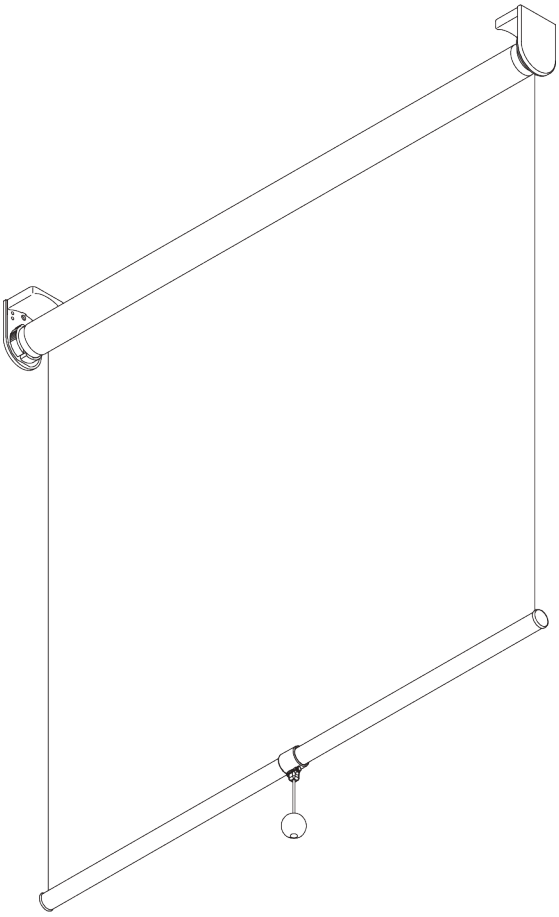

PRODUCT INFORMATION

- ***Operation:*** *spring*
- ***Range:*** *S - M*
- ***Fitting:*** *ceiling, wall, recess*
- ***Colours:*** *white RAL 9016 or anodised aluminum, special colours possible*
- ***Fabrics:*** *refer to Silent Gliss fabric collection*

Features:

- *Speed controller for controlled ascent*
- *Stop clutch mechanism to stop at any position*
- *Click-in brackets*
- *Installation profile*
- *End stop controller*

08/2024/V1

SilentGliss

SYSTEM SPECIFICATIONS

A. SYSTEM DIMENSIONS

2 m

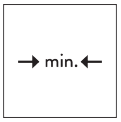

30 cm

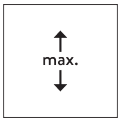

3 m

6 m²

2.2 kg

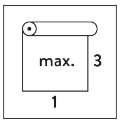

Recommended width / height ratio max. 1:3

B. PROFILE

Profile information

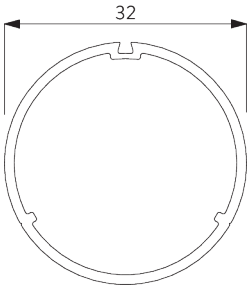

SG 4227
Tube ø 32 mm

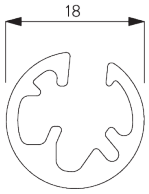

SG 10872
Bottom bar

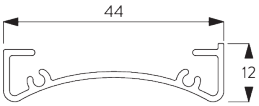

SG 10534
Installation profile

C. HOW TO MEASURE

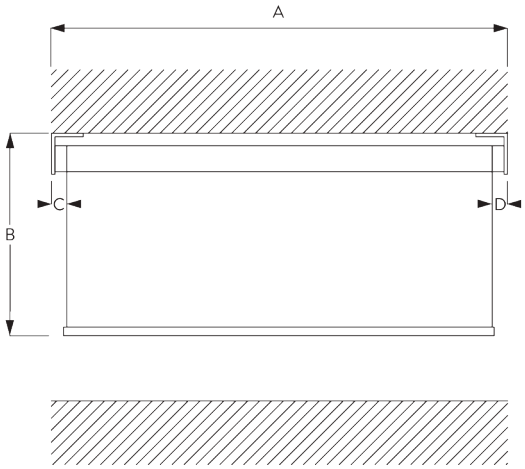

A: System width
B: System height
C: Light gap left side: 15 mm
D: Light gap right side: 15 mm

Note:
All measurements include 2 mm for bracket cover per side!

D. SPECIFICATION TEXT

EN

Silent Gliss SG 4900 Spring Operated Roller Blind System. Roller blind system applications up to 2.0 m wide. Supplied made to measure and complete comprising anodised aluminium barrel SG 4227, 32 mm. Ceiling fix with brackets SG 10987 /SG 10989 / wall fix with brackets SG 10987 / SG 10990 / recess fix with brackets SG 10989 / SG 10991. Optional installation profile SG 10534. Available with optional stop controller SG 4377 to enable exact stop position of the blind. Assembled with powder coated aluminium bottom weight bar SG 4221 / 10633 / 10634 in white, silver or black finish. Spring to be specified according to weight and characteristics of fabric. Fabric to be chosen from the Silent Gliss fabric range, Price Groups 1-4.

SV

Silent Gliss SG 4900 fjädermanövrerat rullgardinsystem. Rullgardinsystem för installationer med max. breddmått 2 m. Levereras komplett i specificerat mått innefattande anodiserat rör SG4227, 32 mm. Takmontage med SG 10987 / SG 10989 / väggmontering med fästen SG 10987 / SG 10990 / infälld montering med fästen SG 10989 / SG 10991. Alternativt med installationsprofil SG 10534. Tillbehör SG 4377 för att bestämma exakt ändläge nertill/upptill. Monterad tyngdprofil i aluminium i finish vitt/alu/svart med SG 4221 / 10633 / 10634). Fjäder anpassas efter vikt och typ av textil. Textil från Silent Gliss textilprogram i prisgrupp 1-4.

NO

Silent Gliss SG 4900 Fjærbetjent rullegardinsystem. Rullegardinsystem for maks. bredde på 2 meter. Leveres komplett på spesialmål med anodisert rør integrert, SG4227, 32mm. Takmontering med SG10987 / SG10989 / veggmontering med feste SG 10987 / SG 10990 / innfelt montering med feste SG10989/SG 10990. Alternativt med installasjonsprofil SG 10534. SG 4377 brukes for å justere eksakt endeposisjon oppe/nede. Montert tyngdeprofil i aluminium i finish hvit/alu/svart med SG 4221 / 10633 / 10634. Fjær tilpasset vekt og type av tekstil. Tekstil fra Silent Gliss kolleksjon i prisgruppe 1-4.

DA

Silent Gliss SG 4900 fjederstyret rullegardinsystem. Rullegardinsystemer til installationer med op til 2,0 m bredde. Leveres i ønsket længde og samlet. Består af anodiseret aluminiumrør SG 4227, 32 mm. Fastgøres i loftet med beslagene SG 10987 / SG 10989 eller fastgøres i væggen med beslagene SG 10987 / SG 10990. Kan også indfældes med beslagene SG 10989 / SG 10991. Alternativt med installationsprofil SG 10534. Valgfri stopstyring SG 4377 for at bestemme rullegardinets nøjagtige stop-position. Monteret med pulverlakeret tyngdeprofil af aluminium SG 4221 / 10633 / 10634 med hvid, sølv eller sort finish. Fjederen tilpasses efter vægt og type af stoffet. Stoffet vælges fra Silent Gliss stofprogrammet, prisgrupper 1-4.

FITTING

A. FITTING INFORMATION

For detailed fitting information, visit the Silent Gliss website.

Fixing points

Brackets (wall / ceiling)

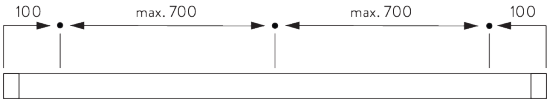

Installation profile SG 10534 (wall / ceiling)

B. CEILING FITTING

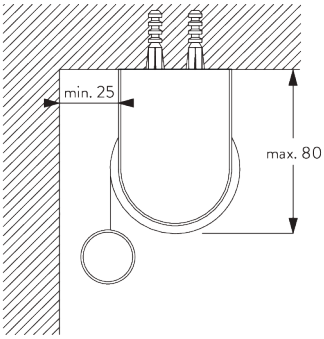

Brackets

Bracket SG 10989: window rolling side of fabric
Bracket SG 10991: room rolling side of fabric

Bracket SG 10987

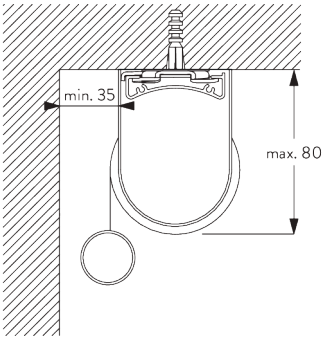

Installation profile SG 10534 and clamps SG 3033 or SG 3044

Bracket SG 10989: window rolling side of fabric
Bracket SG 10991: room rolling side of fabric

Bracket SG 10987

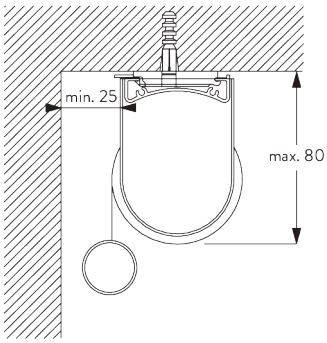

Installation profile SG 10534 and click bracket SG 10539

Bracket SG 10989: window rolling side of fabric
Bracket SG 10991: room rolling side of fabric

Bracket SG 10987

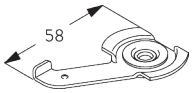

SG 3033
Clamp

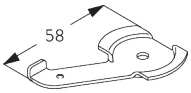

SG 3044
Clamp

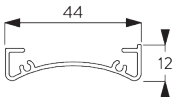

SG 10534
Installation profile

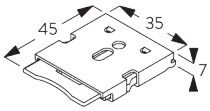

SG 10539
Bracket

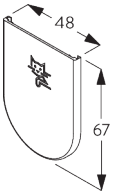

SG 10574

Bracket cover

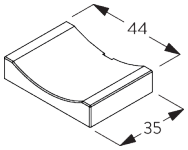

SG 10575

Bracket cover

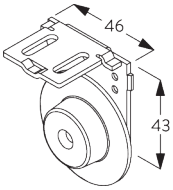

SG 10987

Bracket

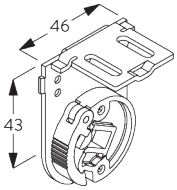

SG 10989

Bracket

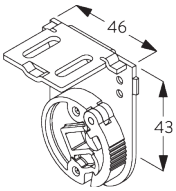

SG 10991

Bracket

C. WALL FITTING

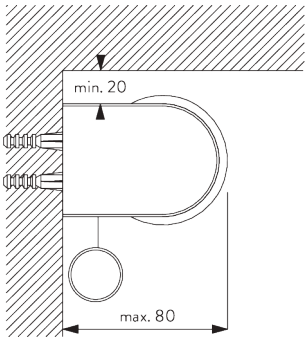

Brackets

Bracket SG 10990: window rolling side of fabric
Bracket SG 10992: room rolling side of fabric

Bracket SG 10987

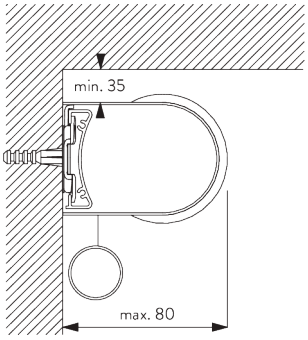

Installation profile SG 10534 and clamps SG 3033 or SG 3044

Bracket SG 10990: window rolling side of fabric
Bracket SG 10992: room rolling side of fabric

Bracket SG 10987

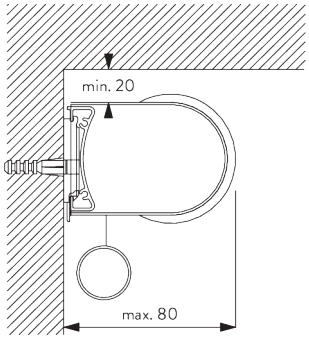

Installation profile SG 10534 and click bracket SG 10539

Bracket SG 10990: window rolling side of fabric
Bracket SG 10992: room rolling side of fabric

Bracket SG 10987

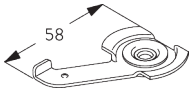

SG 3033
Clamp

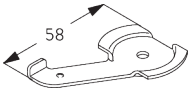

SG 3044
Clamp

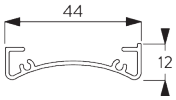

SG 10534
Installation profile

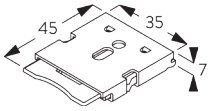

SG 10539
Bracket

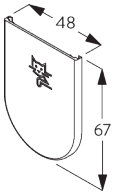

SG 10574
Bracket cover

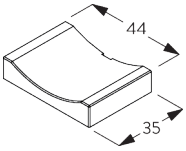

SG 10575
Bracket cover

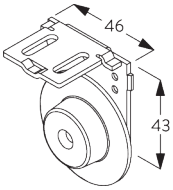

SG 10987
Bracket

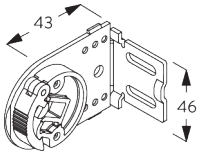

SG 10990
Bracket

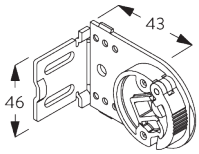

SG 10992
Bracket

D. RECESS FITTING

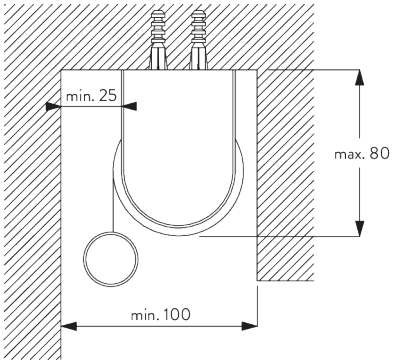

Brackets

Bracket SG 10989: window rolling side of fabric
Bracket SG 10991: room rolling side of fabric

Bracket SG 10987

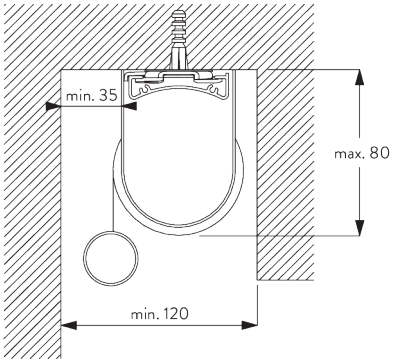

Installation profile SG 10534 and clamps SG 3033 or SG 3044

Bracket SG 10989: window rolling side of fabric
Bracket SG 10991: room rolling side of fabric

Bracket SG 10987

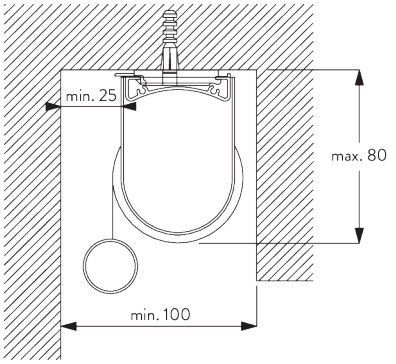

Installation profile SG 10534 and click bracket SG 10539

Bracket SG 10989: window rolling side of fabric
Bracket SG 10991: room rolling side of fabric

Bracket SG 10987

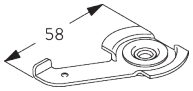

SG 3033
Clamp

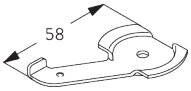

SG 3044
Clamp

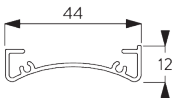

SG 10534
Installation profile

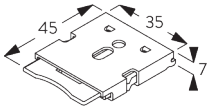

SG 10539
Bracket

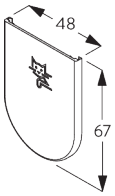

SG 10574
Bracket cover

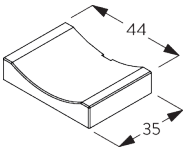

SG 10575
Bracket cover

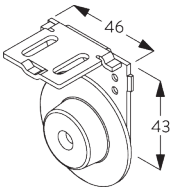

SG 10987
Bracket

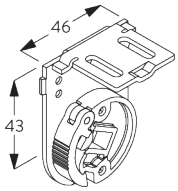

SG 10989
Bracket

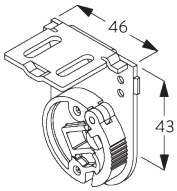

SG 10991
Bracket

SYSTEM OPTIONS

A. FABRIC ROLL-OFF

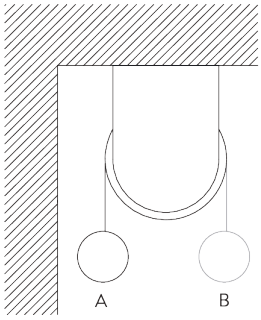

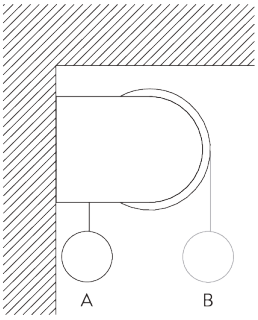

A: Fabric roll-off window side (standard)
B: Fabric roll-off room side (option)

B. INSTALLATION PROFILE

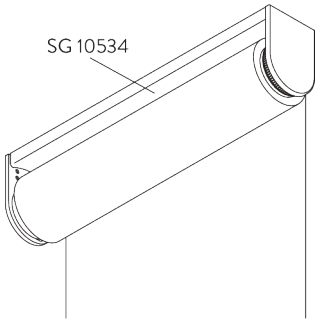

C. ADJUSTABLE END STOP

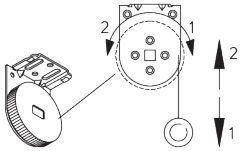

D. TWO SINGLE SYSTEMS SIDE-BY-SIDE

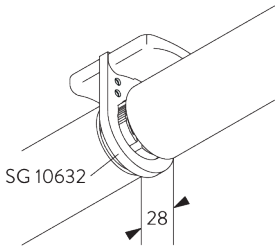

Additional parts:

– 1x SG 10632 Connection bracket cover

E. CHILD SAFETY PULL BALL SET

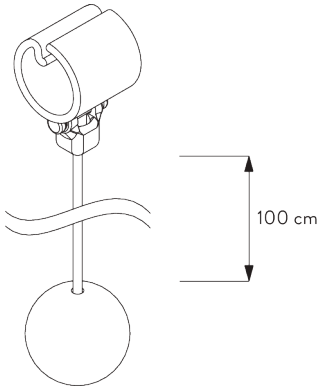

Child safety pull ball set SG 10765

PARTS

A. STANDARD PARTS

SG 4214
Spring C 552 mm

SG 4226
Double tape 30 mm

SG 4227
Tube ø 32 mm

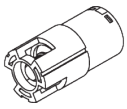

SG 4228
Speed controller right

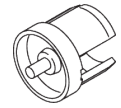

SG 4231
Tube adapter

SG 10574
Bracket cover

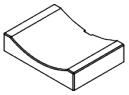

SG 10575
Bracket cover

SG 10668
PVC strip 10 mm

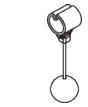

SG 10765
Child safety pull ball

SG 10872
Bottom bar

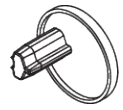

SG 10874
End cover

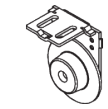

SG 10987
Bracket

SG 10989
Bracket

B. OPTIONAL PARTS

SG 3033
Clamp

SG 3044
Clamp

SG 4212
Spring A 365 mm

SG 4213
Spring B 442 mm

SG 4215
Spring D 612 mm

SG 4216
Spring E 502 mm

SG 4217
Spring F 612 mm

SG 4218
Spring Y-2 198 mm

SG 4377
End stop

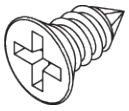

SG 10139
Countersunk screw 2.9x6.5

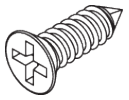

SG 10498
Countersunk screw 2.9x9.5

SG 10534
Installation profile

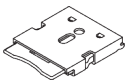

SG 10539
Bracket

SG 10632
Connection bracket cover

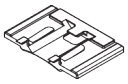

SG 10690
Spacer

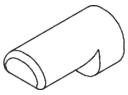

SG 10707
End stop

SG 10988
Bracket end stop

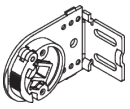

SG 10990
Bracket

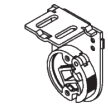

SG 10991
Bracket

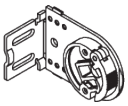

SG 10992
Bracket